REAR LOADED DIY HORN FOR FULLRANGE LOUDSPEAKER SFR 145-8

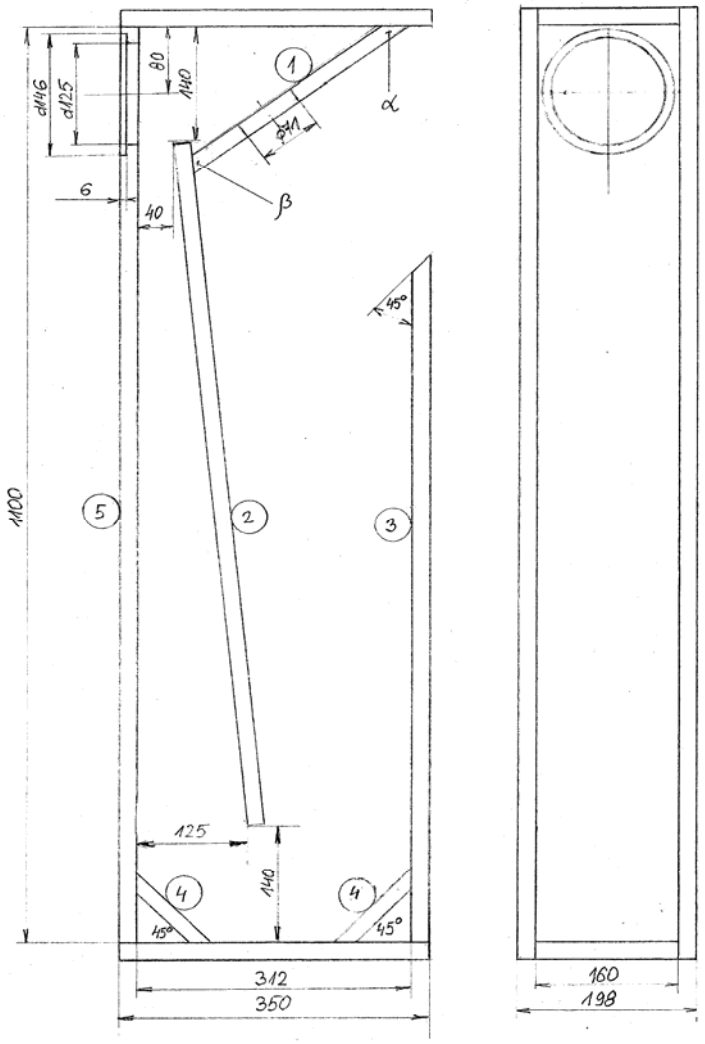

1. Separating wall…..160x300mm 2. Horn wall…..160x825mm
3. Rear wall……...160x825mm 4. 2pcs…..160x120mm
5. Front wall……160x1100mm Top-Bottom…..160x350mm
Side walls……350x1138mm alfa 36grad. Beta 60grad.
Spread the wool equally in the chamber! Material 19mm MDF

www.sonido.hu